Itty Bitty Blakely's Infinity Pump Caddy - Manual

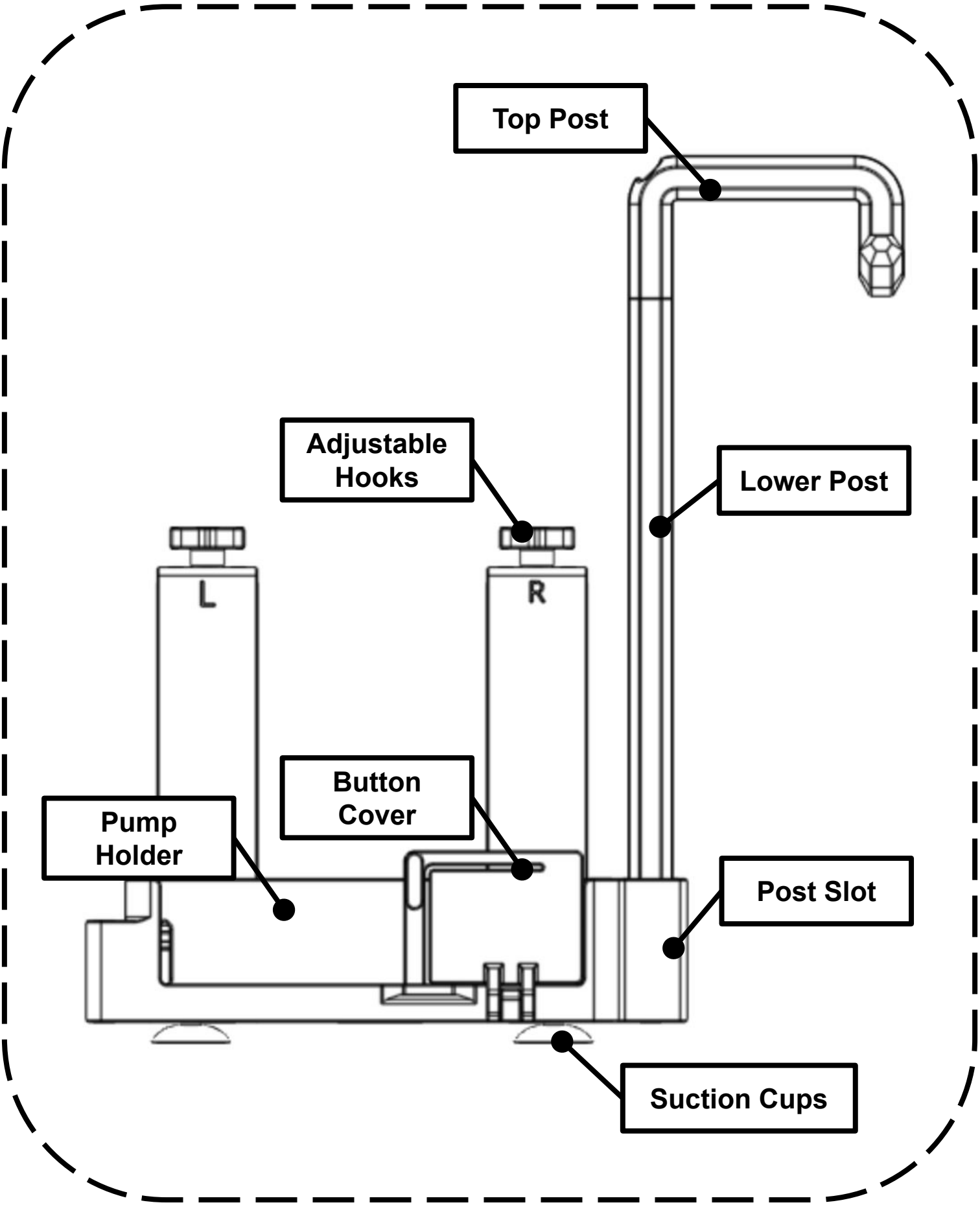

Table of Contents

Hardware Kit	
Qty.	Description
2	M3 x 12mm Bolt
1	Allen Wrench

Component List		
a	Pump Holder	-
b	Lower Post	-
c	Top Post	-
d	Button Cover	-
e	Left Side - Adjustable Hook	Pre-Assembled
f	Right Side - Adjustable Hook	Pre-Assembled
g	Suction Cups	-

1. Assembly Formula Bag Post

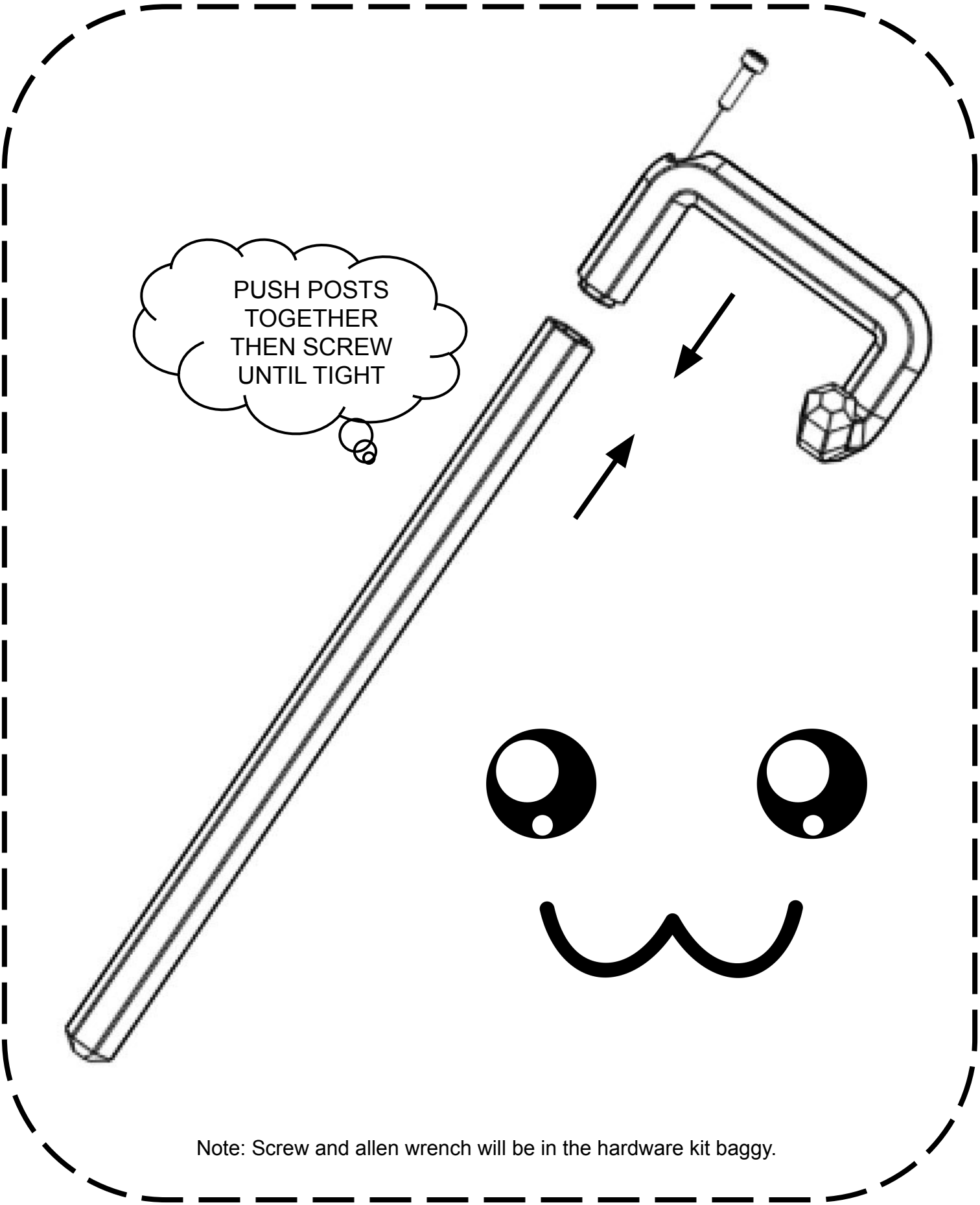

Note: Screw and allen wrench will be in the hardware kit baggy.

2. Suction Cups Installation

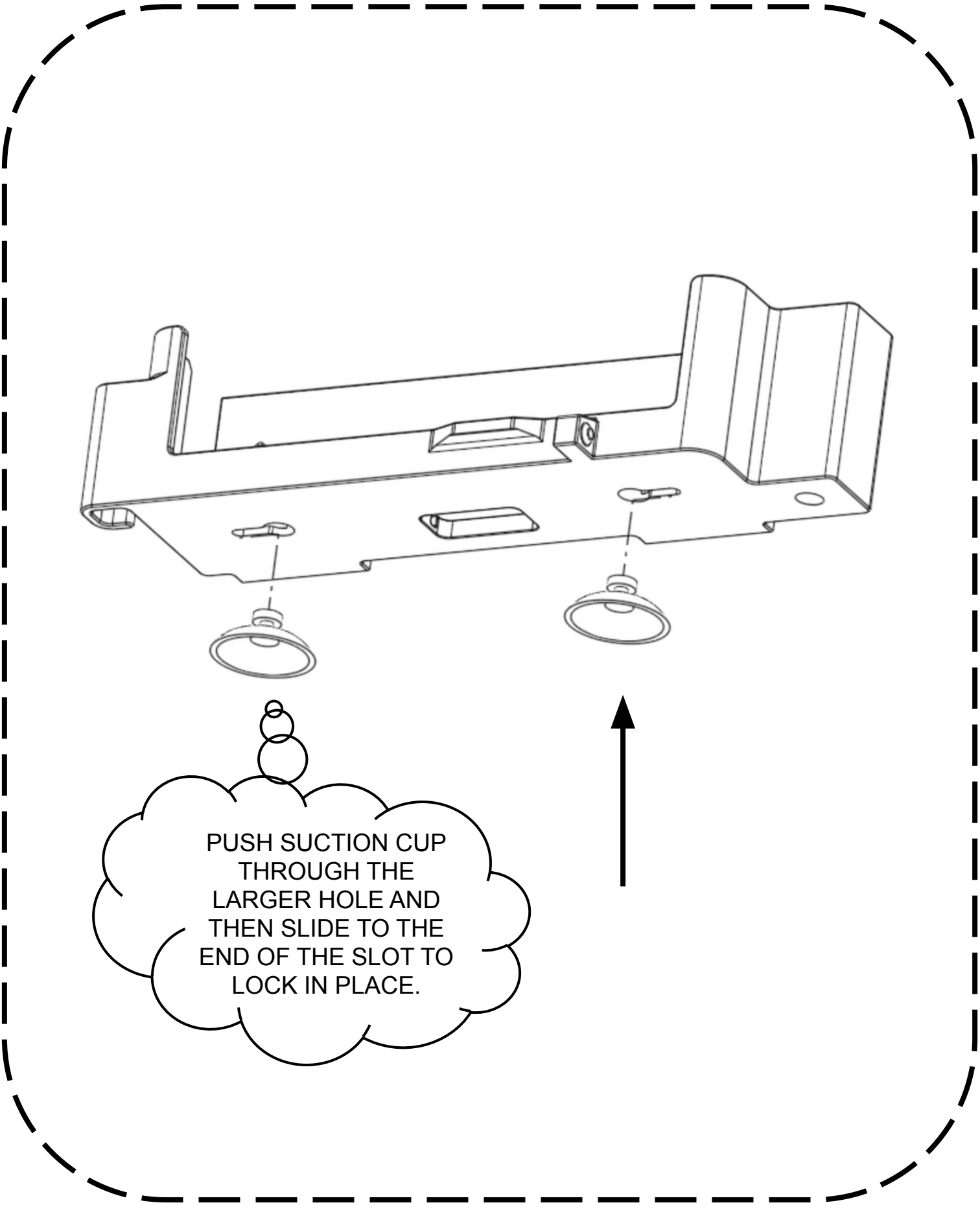

3. Button Cover Installation

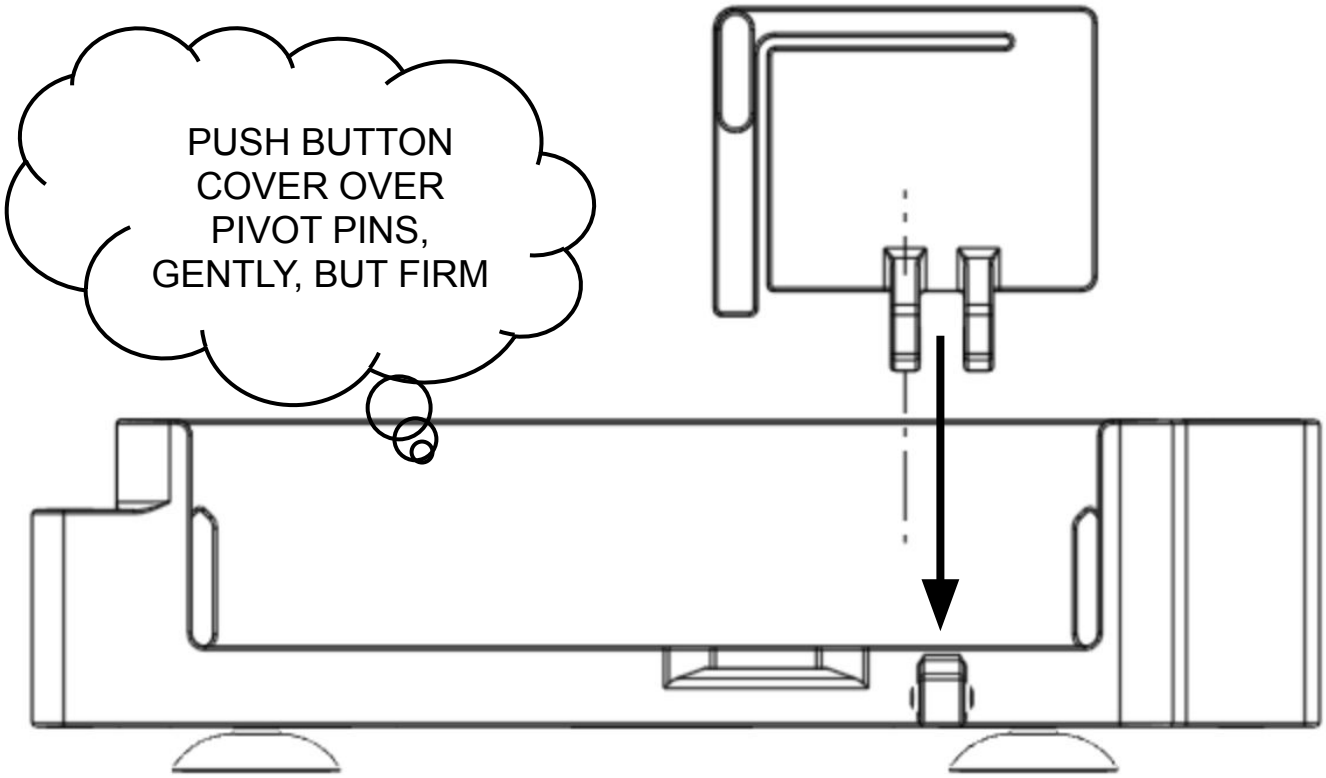

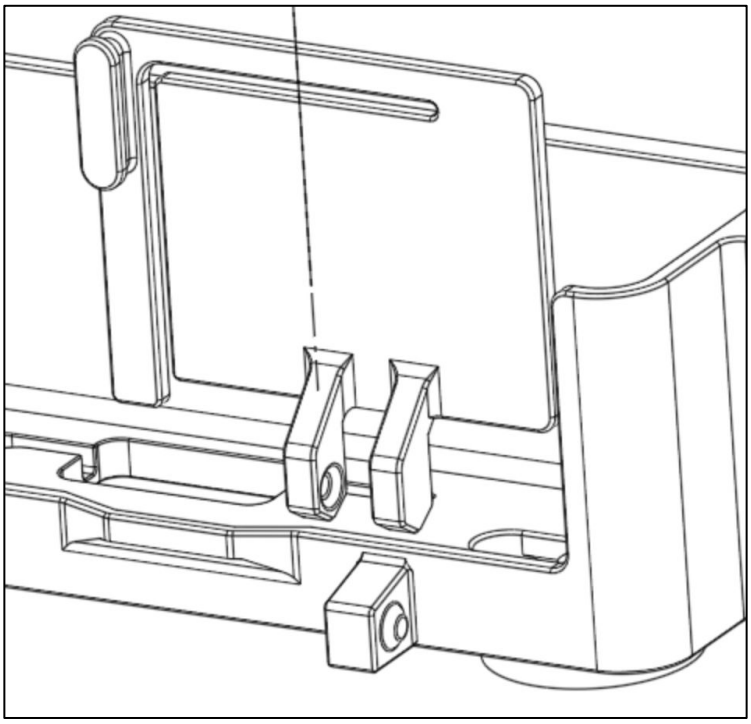

4. Installing Adjustable Hooks

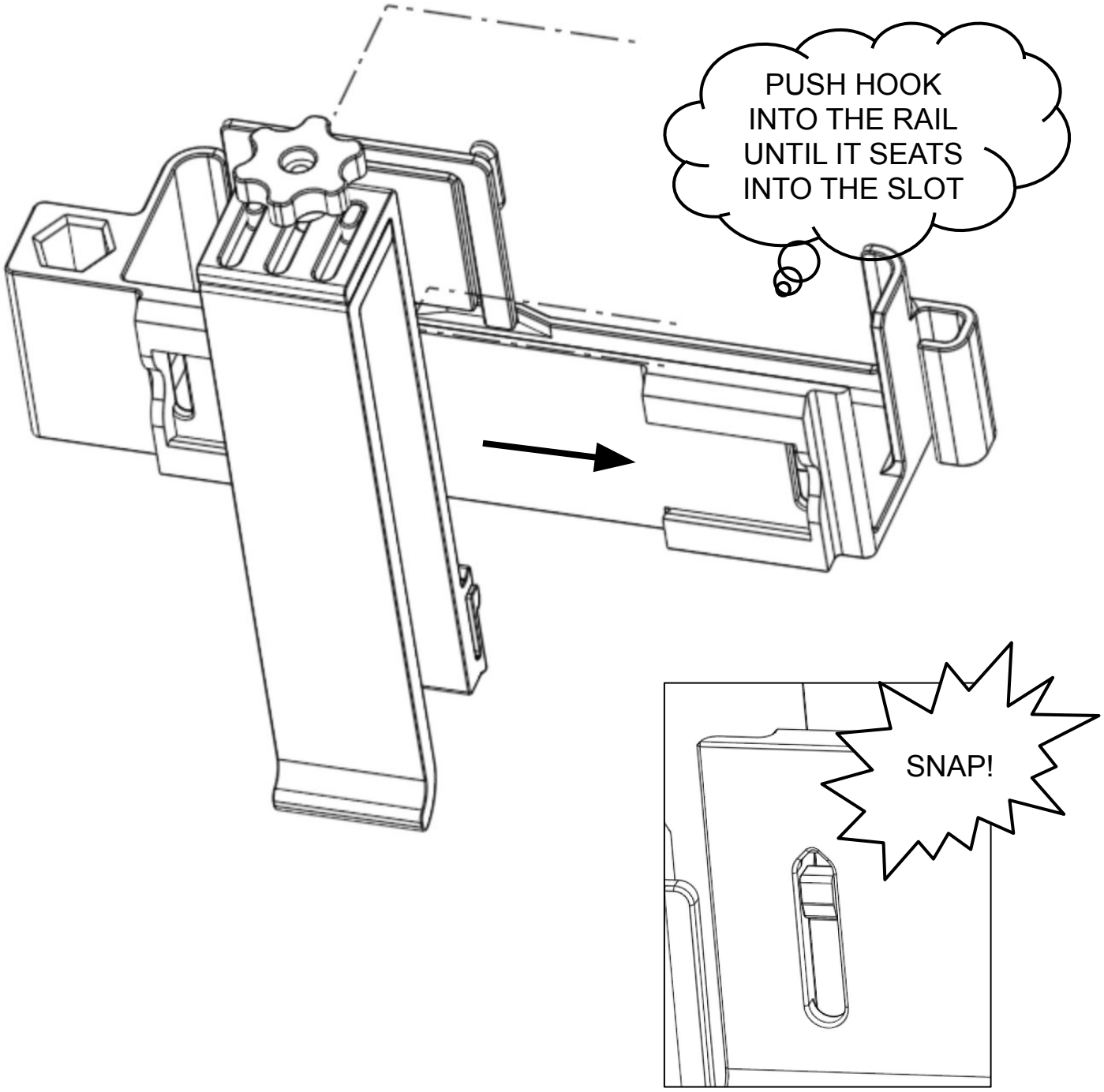

Note: Match corresponding sides to the Caddy Holder. A soft snap sound should be heard when the hook is properly seated, or looks like the picture of the snap installed. Repeat for other side.z

5. Install Post

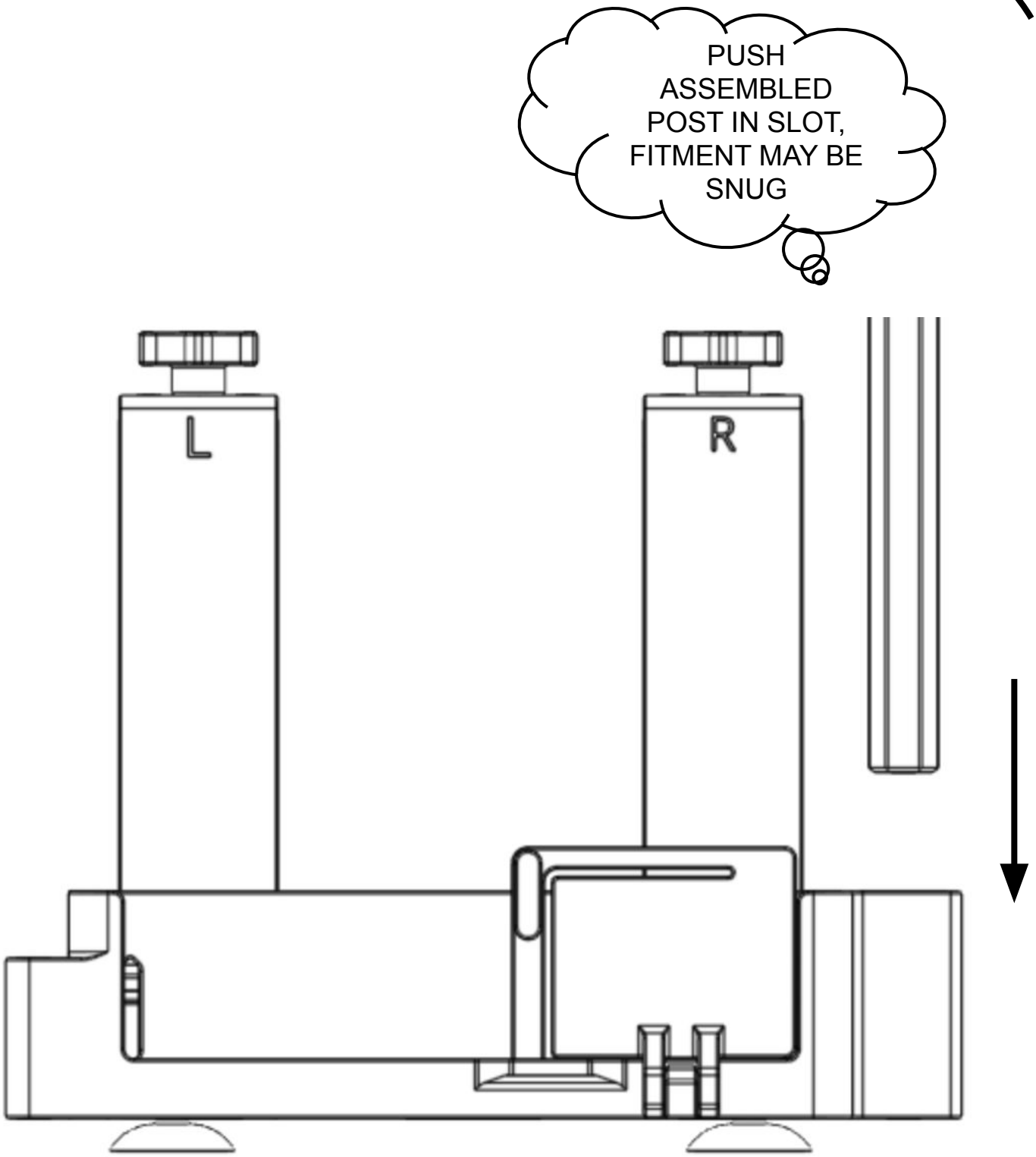

Note: A screw is provided to install at the bottom of the post for maximum security and longer term usage. However, this is not completely necessary for normal operations.

Caddy Features - Part I

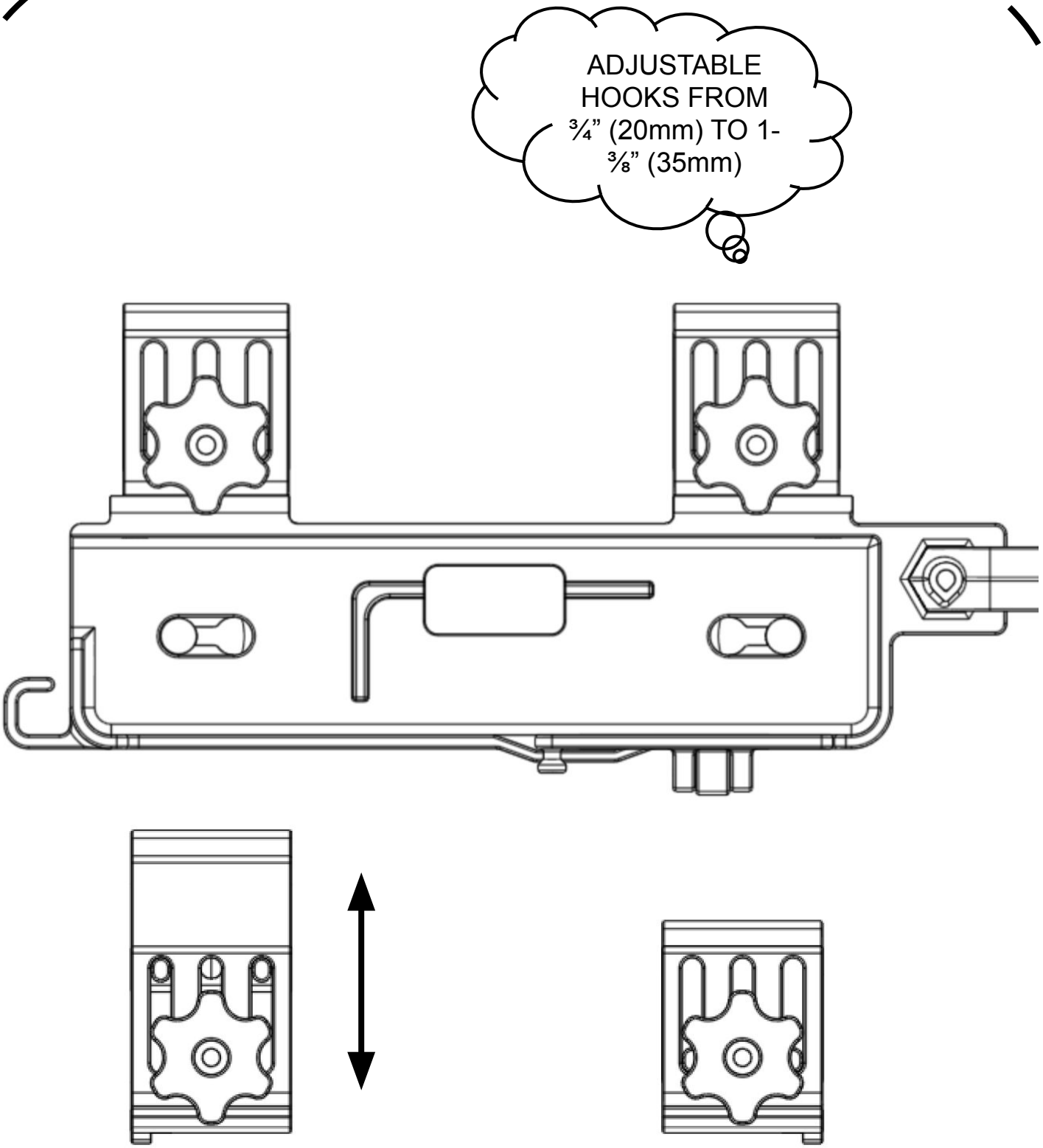

Note: To adjust the hooks, loosen the knobs by 1-2 rotations, then slip over edge, push each side together to get snug fit, then tighten knob securely.

Caddy Features - Part II

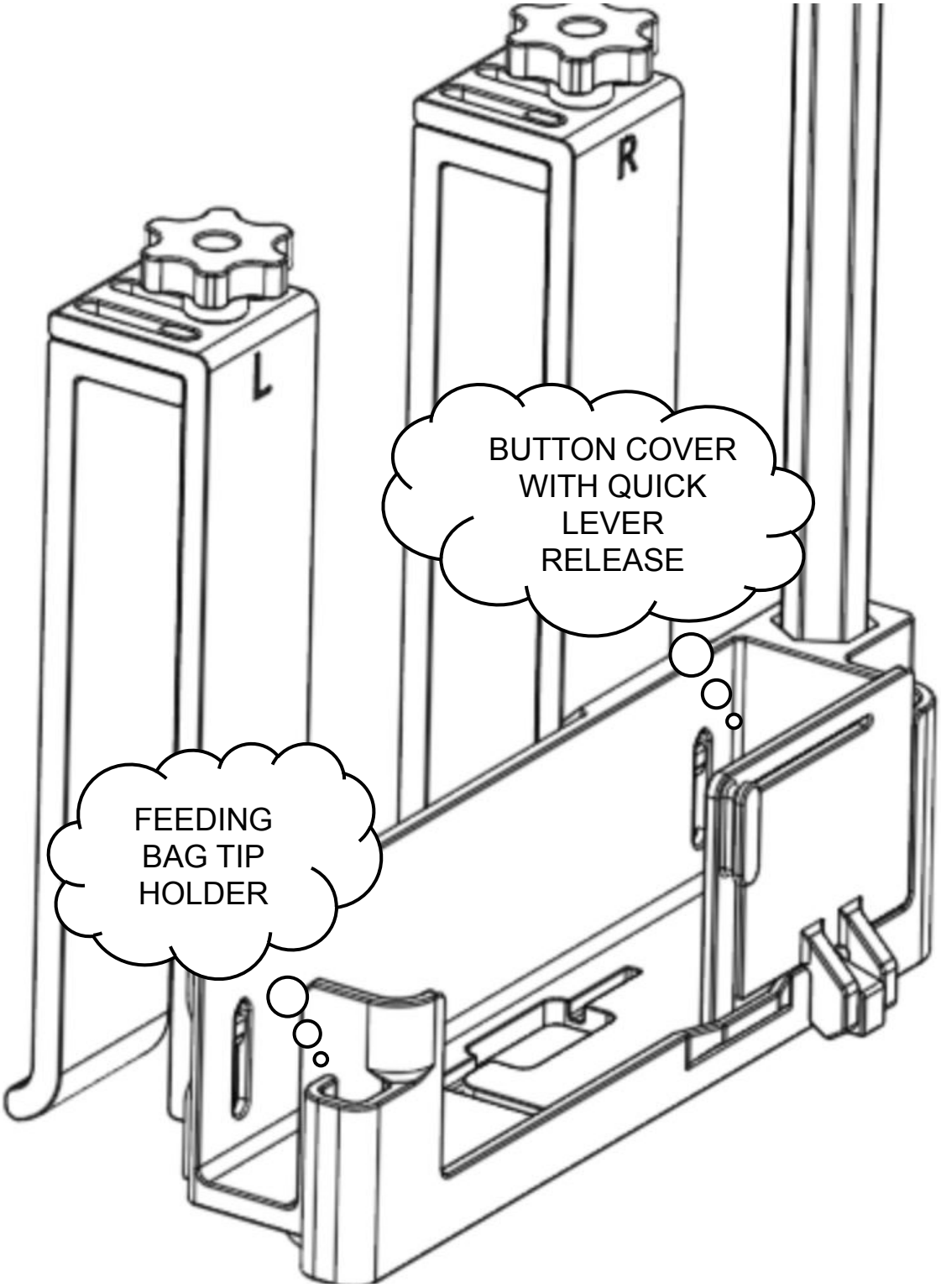

Note: To release the button cover, pull up on the handle slightly until the tab clears the caddy

Troubleshooting

- If the adjustable hooks disassemble, align both pins in the outer slots and then screw in the knob
- While using the suction cup feature to stand up on a flat surface, ensure the surface is as flat as possible and clean to provide the best suctioning force.
- Use a small flat tool or the allen wrench provided to remove the hooks. To remove the hooks align the tool with the slot and pushing until bottoms out on the caddy (gentle pressure is only required), simultaneously push the hook out of the rail.

Note: This section will continuously be updated based on customer experience.

QR Code

SCAN ME